Instructions for **ST4791 CORNER MODULE KIT STAND**

MATERIALS LIST

HARDWARE

40 pc. - 1½" Drywall Screws

5 pc. - Adjustable feet

5 pc. - T-Nut

2 pc. - 3" Bolt

2 pc. - Hex Nut

4 pc. - Washer

FRAME PIECES
3⅜" x ¾" MDF

B = 4 pc. - 17¼" long

C = 2 pc. - 25 7/16" long

D = 2 pc. - 35¼" long

E = 2 pc. - 36" long

LEGS
1½" x 1½" PINE

A = 5 pc. - 35½" tall

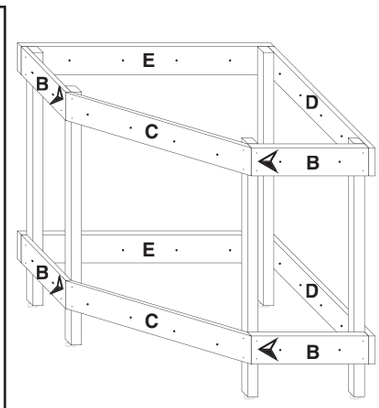

FRONT VIEW

All the frame pieces and leg bottoms have predrilled holes. Make sure the holes on the frame pieces are facing you when you assemble the stand and the tops are flush. A screw gun is recommended when assembling. **NOTE:** Use clamps, if available, to hold in place.

STEP 1. Pound the T-Nuts into the holes on the bottom of each leg (Fig. 1).

STEP 2. Assemble **Assembly 1** (Fig. 2). **NOTE:** Holes in "B" are not equally spaced. It is critical that the 4½" (➢ side) faces the front (FRONT VIEW) for proper connection to other Straight or Corner Module Kit Stands.

STEP 3. Attach **Assembly 1** with frame pieces "E" to create **Assembly 3** (Fig. 3). Set aside.

STEP 4. Assemble **Assembly 2** (Fig. 4). **NOTE: Assemblies 1** and **2** are identical. Then attach **Assembly 2** to frame pieces "D" and an "A" to create **Assembly 4** (Fig. 5).

Fig. 1

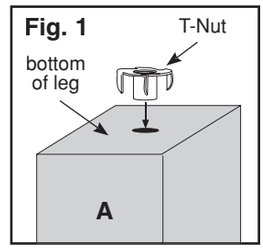

Fig. 2

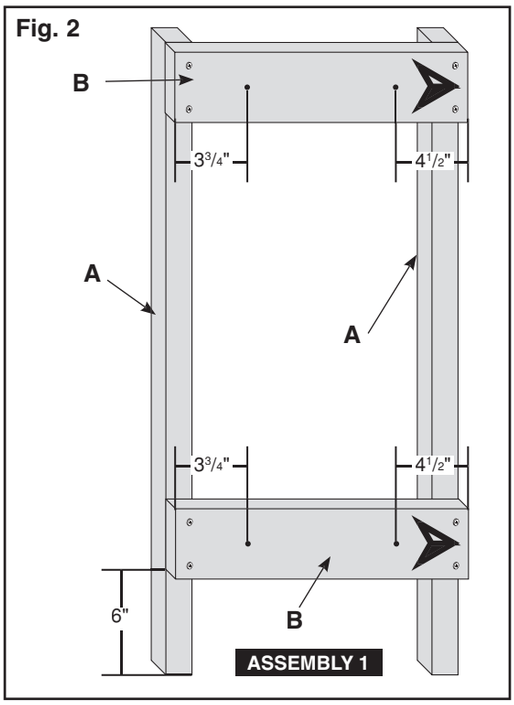

Fig. 3

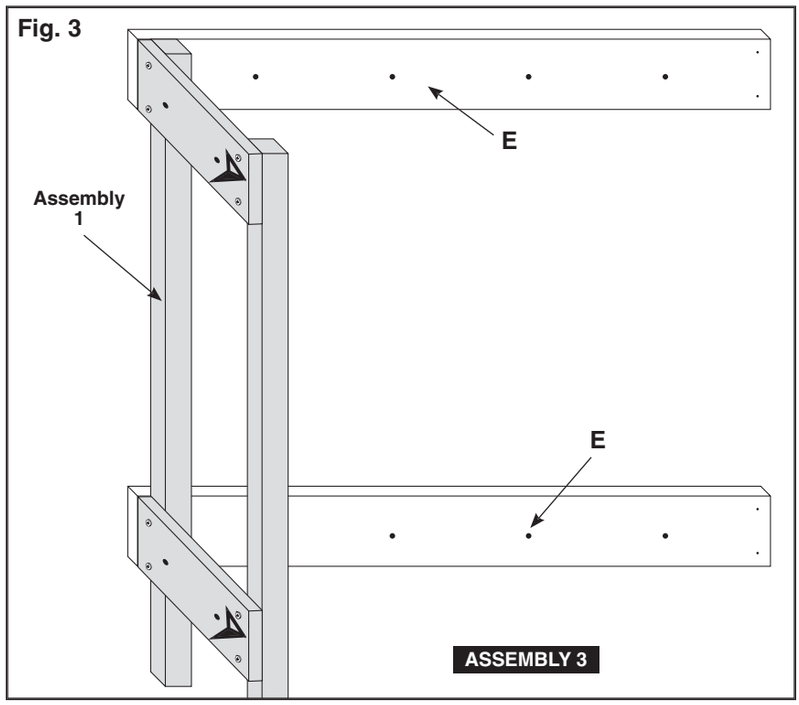

Fig. 4

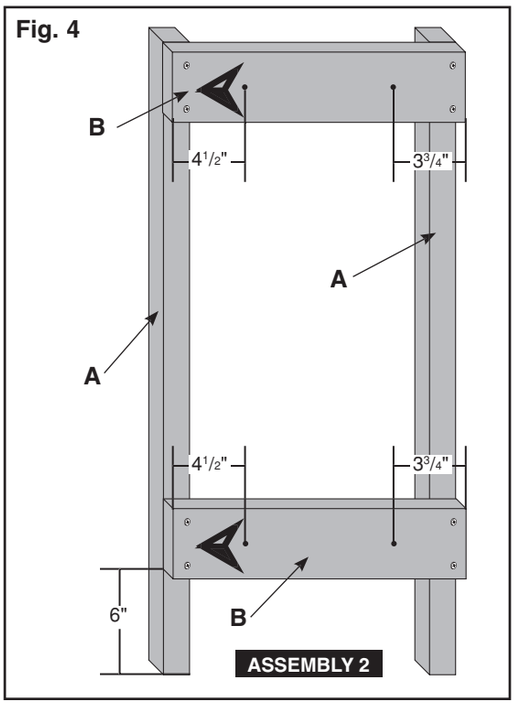

Fig. 5

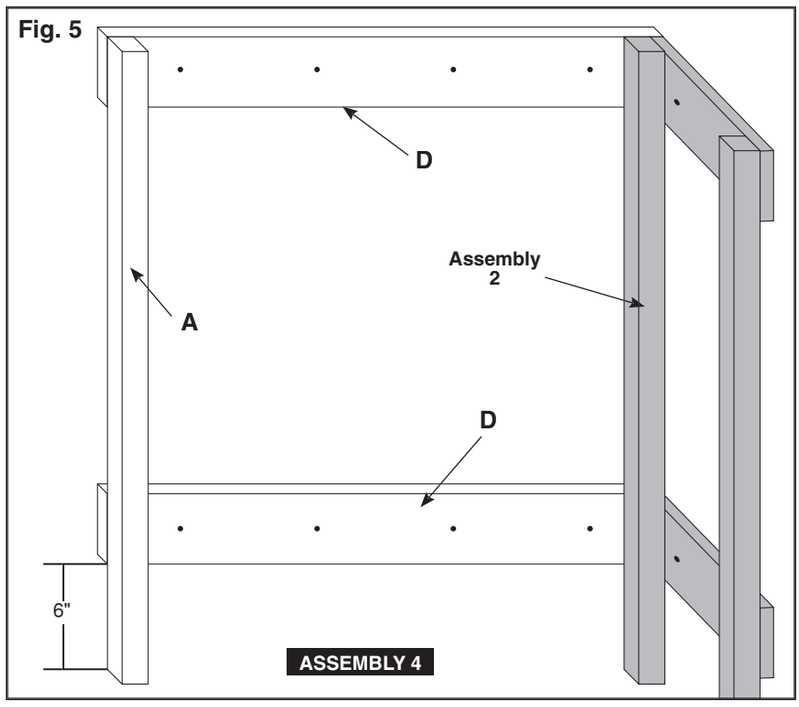

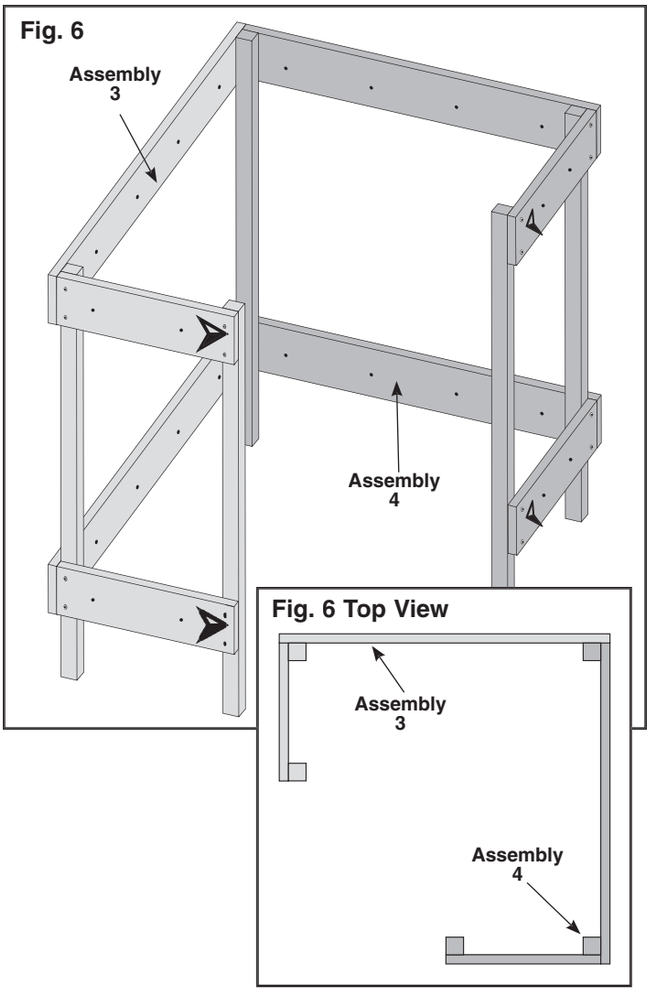

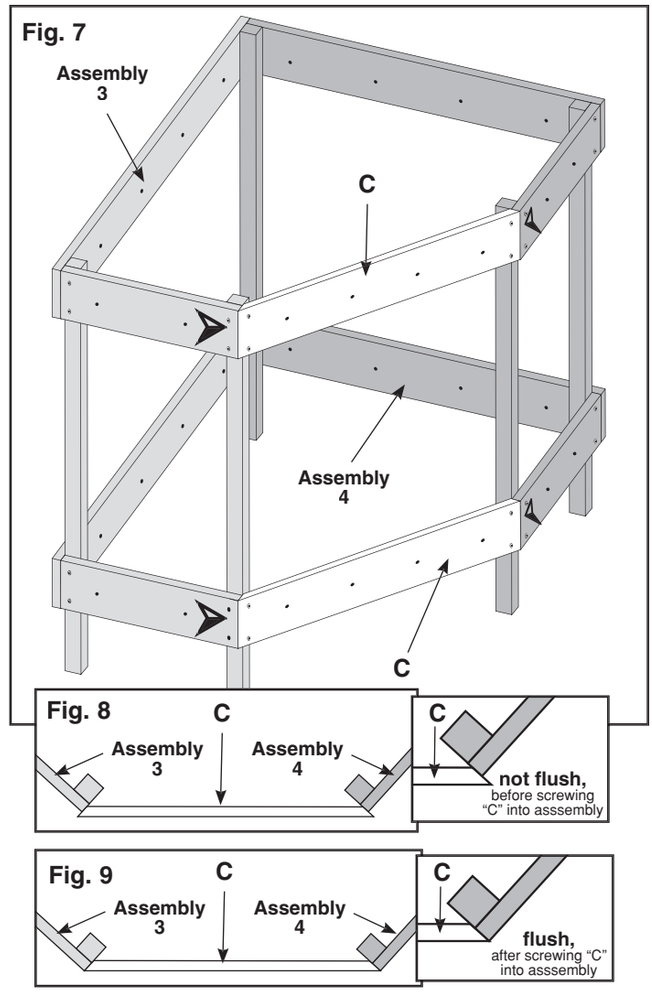

STEP 5. Attach **Assemblies 3** and **4** (Fig. 6).

STEP 6. Attach frame pieces "C" (Fig. 7). **NOTE:** frame pieces "C" may stick out (Fig. 8), but when screwing into the legs they will draw inward and flush with **Assemblies 3** and **4** (Fig. 9).

STEP 7. Turn stand over and screw the feet all the way into the T-Nuts (Fig. 10). Flip the stand upright.

STEP 8. Bolt the stands together with 3" bolts, hex nuts and washers (Fig. 11 and Fig. 12). Position against wall. Make stands level by setting a level on top of the stands at different locations. Adjust the stand's feet accordingly. Cut five squares from scrap foam (approx. 2" x 2"). Glue scrap foam on the underside of module while it is centered on the stand. This will prevent the module from moving around (Fig. 13).

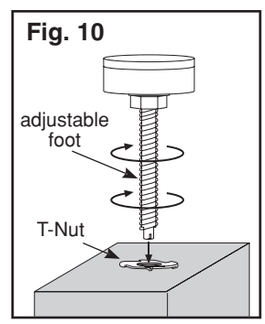

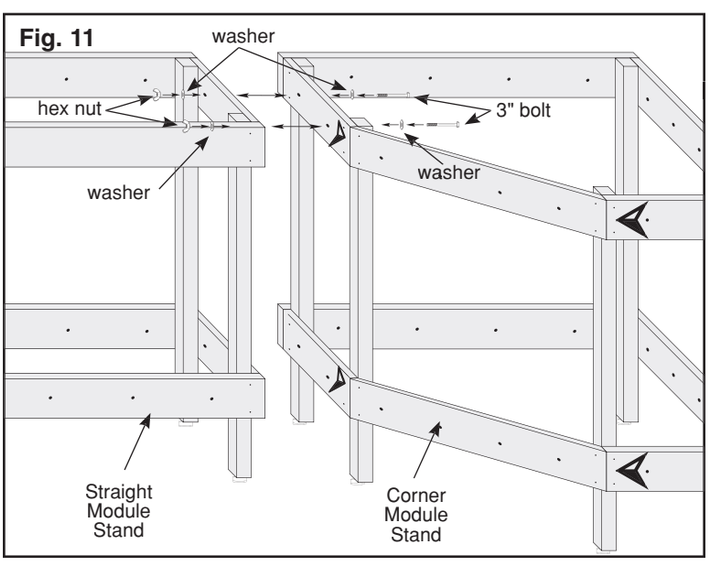

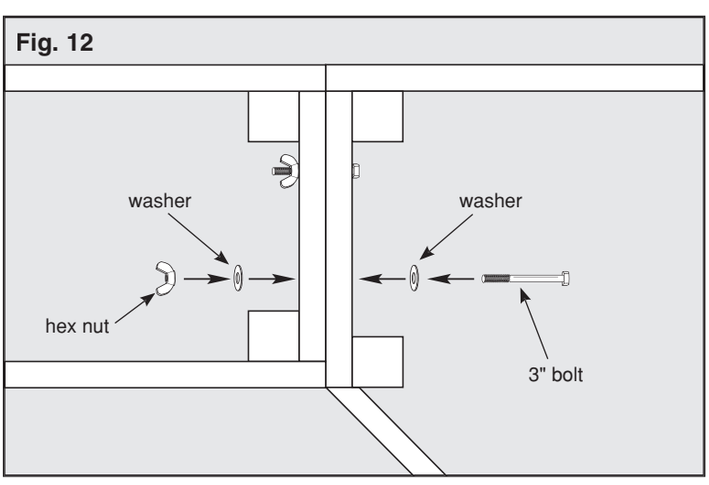

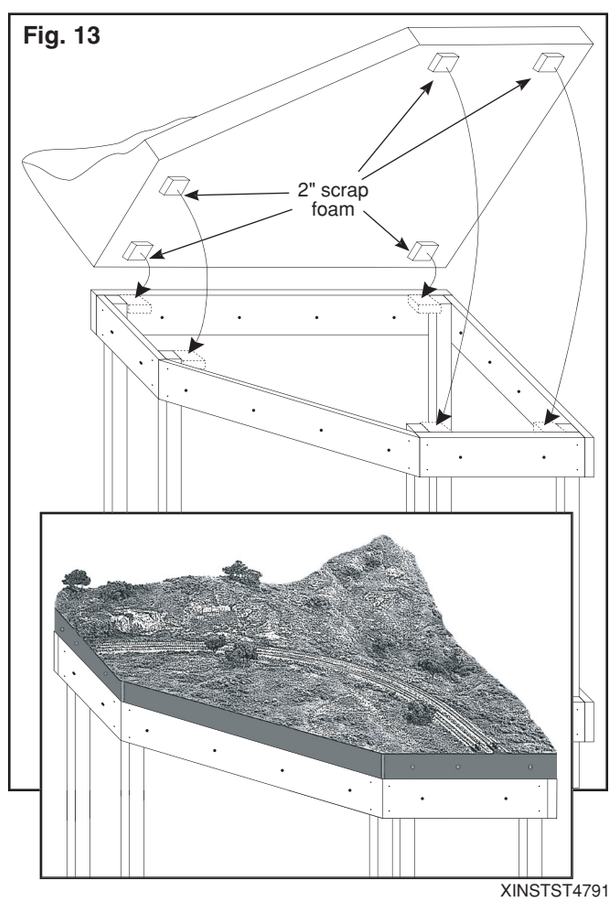

XINSTST4791